Enhanced single Cell Li-Battery and Power System Management IC

FEATURES

- Battery Management
  - Operation Voltage:
  - 2.9V~6.3V (AMR：-0.3V~11V)
  - Configurable Intelligent Power Select system
  - Adaptive USB adaptor voltage/current limit
- Full-integrated Charger
  - 1.4A charge current with built-in MOSFET
  - USB-Compatible charger
  - High precision as 1%
  - Support 4.1V/4.15V/4.2V/4.36V battery
  - Charging process control automatically
  - Auto adjust the charging current according to the system load
- 2 Synchronous Step-Down Converters
  - DC-DC1: can be adjusted between 0.7V~3.5V 25mV/step, load capability up to 1.2A
  - DC-DC2: can be adjusted between 0.7V~2.275V,25mV/step, load capability up to 1.6A,support VRC
- 4 LDOs
  - LDO1:30mA,always on
  - LDO2:low noise LDO, 1.8V~3.3V adjustable, 100mV/step, load capability up to 200mA
  - LDO3:low noise LDO, 1.8V~3.3V adjustable, 100mV/step, load capability up to 200mA
  - LDO4:low noise LDO, 0.7V~3.5V adjustable, 25mV/step, load capability up to 500mA
- Signal Capture
  - Integrated multi-channel 12 bit ADC
  - High accuracy coulomb counter and fuel-gauge system
  - Provide the rich power management information including instantaneous power consumption(mA or mW),remaining power(% or mA),charge status(%),remaining battery life and charge time, etc.
  - Low power warning and protection
  - Provide die temperature information
- Host Interface
  - Two Wire Serial Interface(TWSI) for communication between the processor and PMIC
  - Configurable interrupt management
  - Integrated timer
  - 4 groups registers for the data storage when system shutdown
- System Management
  - Soft reset or hardware reset
  - Support soft shutdown or hardware shutdown, and external wakeup
  - Monitoring output voltage, self-diagnostic function
  - Support PWROK for system reset
  - External power source detect ion (insert/remove/lack of driving capacity)
  - Self-protection: OVP,UVP,OCP,OTP
  - Support OTG VBUS power state setting/monitoring

APPLICATIONS

- Portable Handset:
  Smartphone, PMP/MP4, Digital Camera, Digital Camcorder, PND, PDA, PTV
- Mobile Connected Devices such as xPad,MID
- DPF, Portable DVD Player， Ultra Mobile UMPC and UMPC-like， Entertainment and Education Machine
- Application Processor systems
- Other battery and multi-power systems

Copyright © 2016 X-Powers Limited. All Rights Reserved

DESCRIPTION

AXP173 is a highly integrated power management IC(PMIC) targeted at single cell Li-battery(Li-ion or Li-polymer) applications that require multi-channel power conversion outputs. It provides an easy and flexible power management solution for multi-core processors to meet the complex and accurate requirements of power control.

AXP173 contains an adaptive USB-Compatible charger, 2 Buck DC-DC converter, 4 low dropout linear regulator(LDOs), multi-channel 12-bit ADC including voltage/current/temperature monitoring. To ensure the security and stability of the power system, AXP173 also provides self-protection circuits such as over-voltage protection (OVP), under-voltage protection (UVP), over-current protection (OCP) and over-temperature protection(OTP).

AXP173 has three input sources, including external Adapter ACIN, USB VBUS input and battery.The “Intelligent Power Select”(IPS)™ circuit of AXP173 distributes power safely and transparently among the ACIN, USB, Li-Battery and the application system. It also allows application system to work normally when only running at the external input voltage and not the battery.

AXP173 provides TWSI(Two Wire Serial Interface) to communicate with the application processor. Through the interface, processor can enable or disable the outputs, and set the output voltage, as well as get the power status and “fuel gauge” data, High-accuracy(0.5%) Fuel Gauge data makes it convenient for consumer real-time control and know the system power dissipation, which brings them wonderful experience of device electricity usage that never had before. AXP173 can work under stand-alone mode without the application processor to intervene if the system had no need to adjust the defalut output voltage of AXP173.

AXP173 is available in a 5mm x 5mm 32-pins package.

.

Copyright © 2016 X-Powers Limited. All Rights Reserved

TYPICAL APPLICATION DIAGRAM

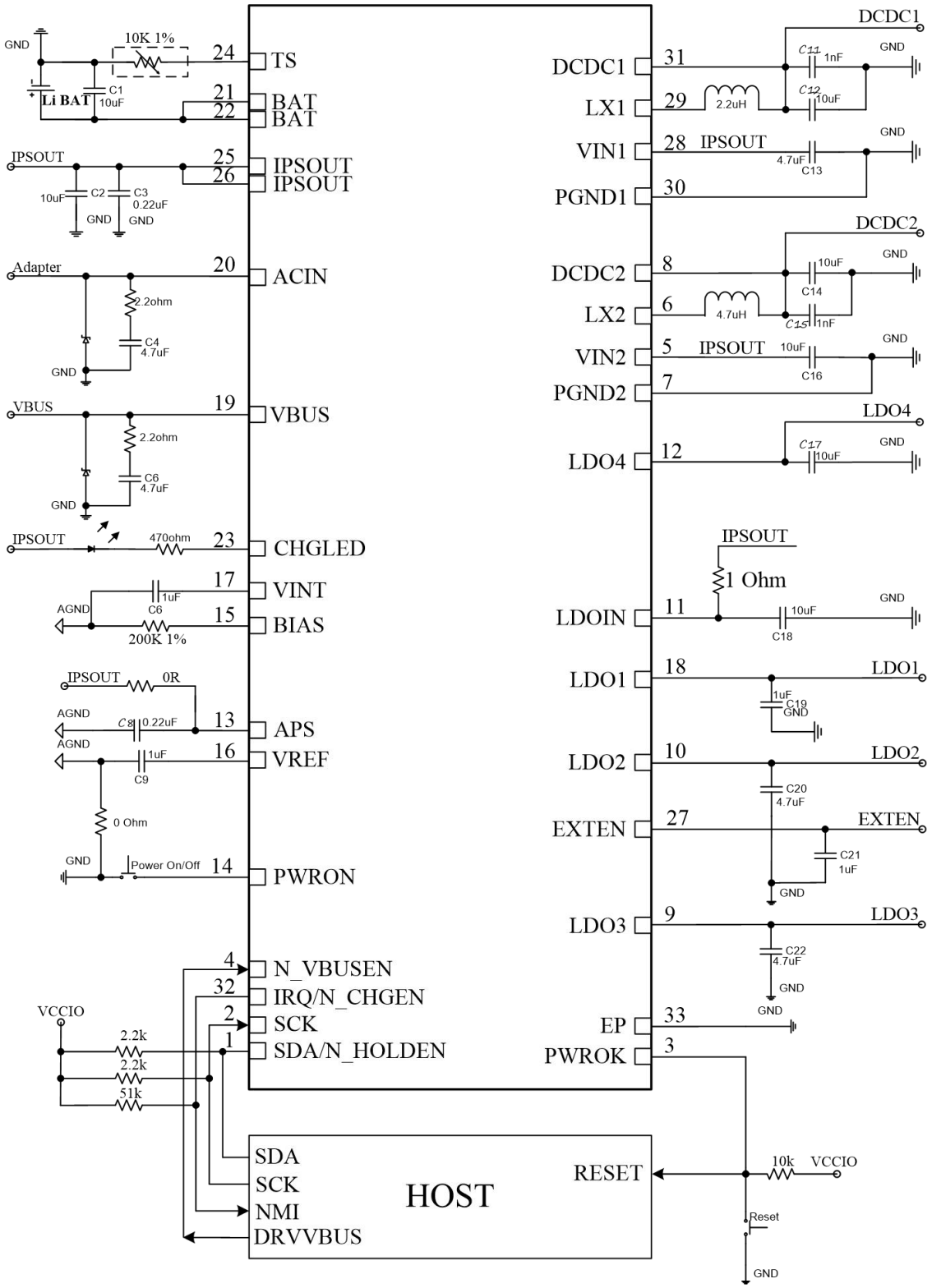

Figure 1. Typical Application Circuit

Copyright © 2016 X-Powers Limited. All Rights Reserved

PIN CONFIGURATION

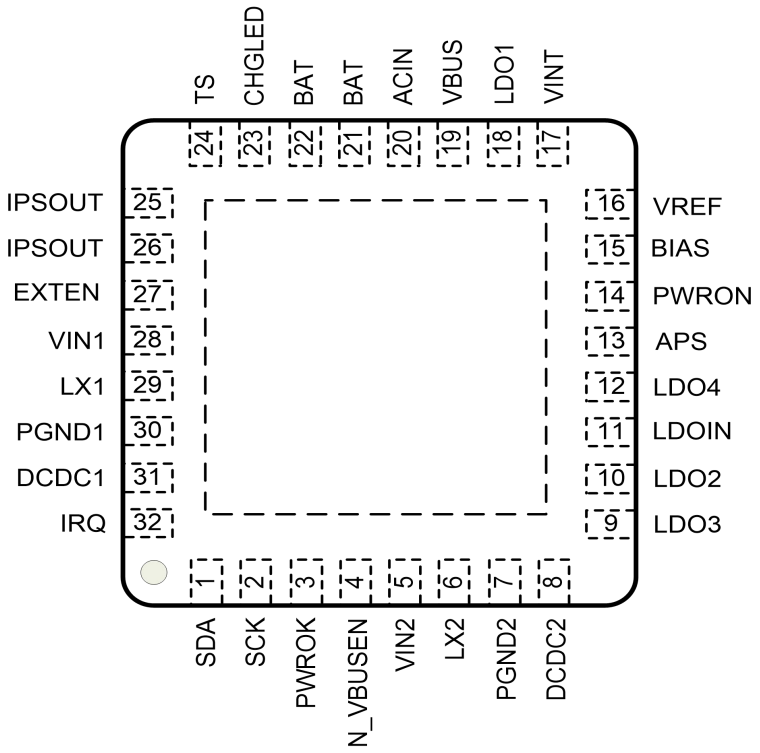

Figure 2. AXP173 Pin Configuration

DECLARATION

X-POWERS CANNOT ASSUME RESPONSIBILITY FOR USE OF ANY CIRCUITRY OTHER THAN CIRCUITRY ENTIRELY EMBODIED IN AN X-POWERS PRODUCT. NO CIRCUIT PATENT LICENSES, COPYRIGHTS, OR OTHER INTELLECTUAL PROPERTY RIGHTS ARE IMPLIED. X-POWERS RESERVES THE RIGHT TO MAKE CHANGES TO THE SPECIFICATIONS AND PRODUCTS AT ANY TIME WITHOUT NOTICE.

Copyright © 2016 X-Powers Limited. All Rights Reserved